LIGHTSPEED
ACCESSORIES

GRAVOTECH
by BRADY

Quick Switch tables

See the webpage

Adapted for
Enhance object positioning and cutting quality

Key feature
Change work tables as you go without tools

MAGNETIC SYSTEM TO SWITCH AS NEEDED

- **Five different tables** for every LightSpeed application: from **precision engraving** to **perfect cutting.**
- **Swap tables** as often as needed without risking errors thanks to **magnetic positioning.**
- Designed to leverage the LightSpeed machines' optimized airflow management.

Model	Ref.
Standard table	**92692**
Ferromagnetic table	**92693**
Cutting table	**92691**
Blades table	**92694**
Precision table	**92690**

Table accessories

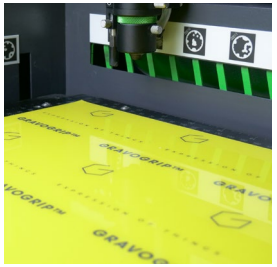

Gravogrip™

For working with highly **flexible materials such as paper, cloth, or Flexilase™**, the Gravogrip™ silicone backing guarantees ideal support and flatness.

Sheet size: 610 x 305 mm

Ref. 71052

Pin supports

Positioned anywhere on the laser table, pin supports minimize contact point between the material and the table to totally **avoid beam reflection**, while holding the part in place once it is cut.

Ref. 27352

LightSpeed EasyFix

This kit contains 3 magnetic jigs compatible with the Quick Switch ferromagnetic table. It is an ideal positioning solution for engraving cylinders.

Ref. 93815

Click Lens

See the webpage

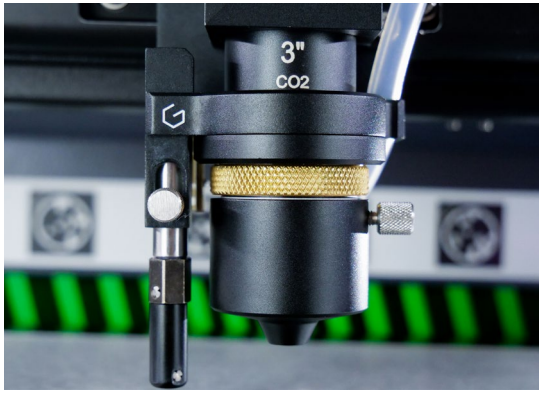

Adapted for
From fine engraving to thick material cutting

Key feature
Instantly switch focal lengths from 1.5” to 4”

FAST, TOOL-FREE LENS MOUNTING

- Click Lens mount instantly on the laser head thanks to a **magnetic system, with no tools required.**
- Each lens is perfectly positioned every time, **reducing setup errors and ensuring consistent results.**

Each focal length is designed for a specific use. Select the Click Lens that matches your application to get the best performance from your laser.

CO2	Best for	Ref.
1.5’’	Precision engraving	**92681**
2’’	Everyday versatility	**92682**
3’’	Mixed engraving and cutting	**92683**
4’’	Thick material cutting	**92684**
2’’ * *Extra Clearance*	Adds working distance between the lens and the object to be engraved, perfect for engraving objects with edges or deep objects	**92774**
4’’ * *Extra Clearance*		**92805**

With CO2 lasers, the lens included is 2”.

**Extra Clearance lens:*
- *The 2“ lens allows 12 mm of additional distance.*
- *The 4” lens allows 62.5 mm of additional distance.*

HOW TO CHOOSE YOUR CLICK LENS?

Short focal lengths deliver **maximum precision**, while longer focal lengths improve **cutting capability.**

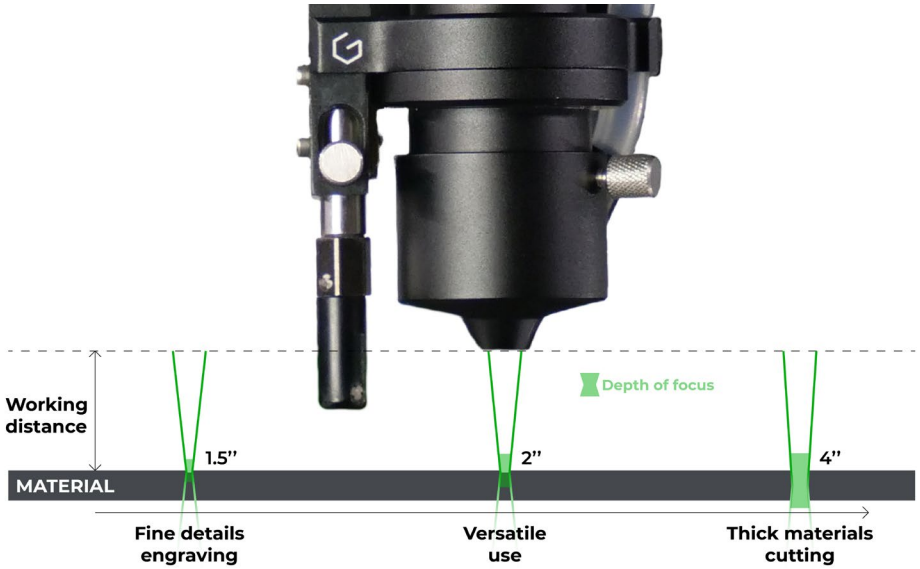

- **1.5’’ lens engraving:** With a very narrow focal angle, this lens is designed for the most detailed engraving. It is ideal for small text, intricate logos, and high-precision engraving in general.
- **2’’ lens engraving:** This versatile lens is perfect for everyday use. It is suitable for both engraving and standard cutting on most materials.
- **4’’ lens engraving:** With the widest focal angle in the range, this lens is designed for cutting thick materials. It guarantees a clean cut.

Lens cleaning kit

The lens is a critical optical component that must remain **clean and protected**. This kit contains everything you need to clean your lenses: cleaning solution, wipes, and cotton swabs. *(Included with every LightSpeed 300 purchase)*

Ref. 26327

Rotary device

Ref. 92696

See the webpage

Max. diameter: 160 mm (6.3")
Max. length: 390 mm (15.4")
Max. tilt angle: 10°

Adapted for
Engraving cylindrical or conical objects

Key feature
Converts the Y-axis into rotary motion

UNLOCK CYLINDRICAL ENGRAVING

- Perfect for **drinkware** and **promotional items**, increase the value of your laser production.
- Quick installation and **stable positioning** for consistent and repeatable engraving results.
- **Sold with 5 cones,** to maintain and secure various cylindrical objects to engrave.

Model	Ref.
Male cone ⌀ 15-75 mm	**14338**
Male cone ⌀ 20-105 mm	**87389**
Male cone ⌀ 65-120 mm	**14339**
Female cone ⌀ 16-60 mm	**14344**
Female cone ⌀ 90-106 mm	**86852**

Small item adaptor

This adapter for small items is perfect for personalizing **gifts such as bracelets and cups.**

Object diameter: between 1 and 100 mm

Ref. 92119

Other accessories

Air compressor

The air compressor is an **essential accessory** for workshops without a general air system.
Integrated **directly into the machine** at the factory, it supplies the **air-assistance system** during engraving and cutting without requiring an external connection.

Model	Ref.
100 V	**92742**
110 V	**92743**
220 V	**92744**

Wi-Fi dongle

A Wi-Fi network connection key, this accessory allows you to connect your laser machine to a **wireless network** without using an Ethernet cable.

Ref. 92748

Emergency stop button

This accessory, **highly appreciated by industries,** allows you to add an emergency stop button to the LightSpeed machine. With its **magnetic mount**, it can be placed anywhere directly on the machine or on a nearby metal surface.

Ref. 92803

Why fume extraction matters?

Laser engraving and cutting generate **smoke, particles, and odors** that directly impact machine performance, operator safety, and final quality. A proper extraction system is not optional; it is **essential.**

WHAT DOES AN EXHAUST SYSTEM DO?

- Removes smoke and particles at the source
- Filters dust, fumes and odors
- Maintains a clean and safe engraving environment

WHY IS IT KEY TO INVEST IN AN EXHAUST SYSTEM?

- Protect your operator and workspace
- Preserve engraving quality and consistency
- Extend the machine and optics lifetime

WHY IS AN EXHAUST SYSTEM BETTER THAN A FAN TURBINE?

For professional use, filtration is key to ensure safety, **compliance, and consistent results.**

External ventilation

- Releases fumes outside
- Depends on building setup
- No filtration of harmful particles
- Not always compliant

Fume extractor

- Filters air before releasing
- Plug & Play solution
- Multi-stage filtration (particles + odors)
- Safer for indoor environment

GRAVOTECH EXHAUSTS SYSTEMS

HOW TO CHOOSE AN EXHAUST SYSTEM TO SUIT YOUR NEEDS?

Insufficient airflow leads to smoke accumulation, **reduced quality, and faster contamination of lenses.**

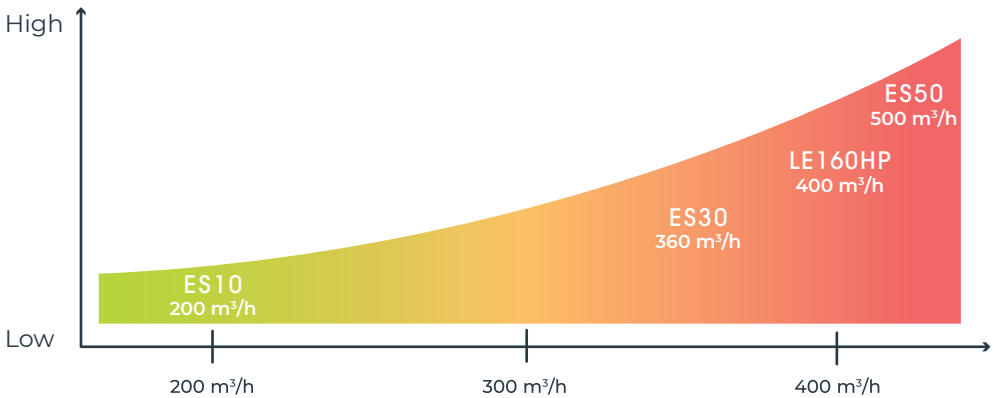

Engraving
Moderate airflow for fine particle extraction

Cutting
Higher airflow to extract smoke production

Intensive production
Constant high airflow recommended

LE160HP

See the webpage

Adapted for
Dedicated workshops and production spaces

Max. air flow rate
400 m³/h

CLEAN AIR AND CONSISTENT LASER PERFORMANCE

- Maintain a **clean and safe work area,** free from laser-produced fumes. Designed for medium and high-volume production environments, this exhaust system is **ideal for cutting work.**
- Dedicated exhaust system that can also be **a stand at worksurface height for your LightSpeed.**
- With the "Easy integration exhaust" feature, the connection to the laser machine is made **without any visible pipes.** The machine connects directly when it is placed on the exhaust system.

Are you looking for a compact exhaust system?

ES Range

Easy to move; available in three sizes to **accommodate space** constraints and suit the amount of smoke your machine produces.

Max air flow rate	
ES10	200 m³/h
ES30	360 m³/h
ES50	500 m³/h

Filters for exhaust

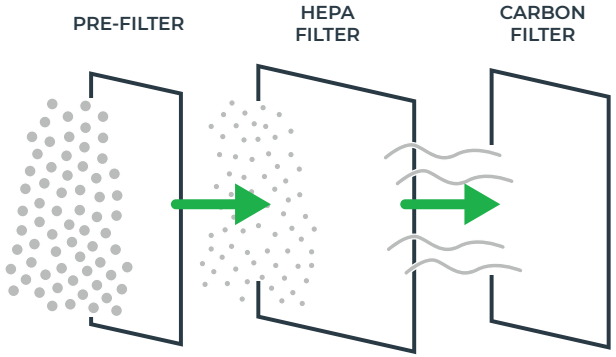

LE160HP filters

Model	Ref.
Pre-filter 1	**49286**
Pre-filter 2	**50113**
HEPA filter	**49281**
Carbon pads (x4)	**49284**
Carbon filter (with activated carbon)	**49282**

ES Range filters

	ES10 / ES30	ES50
Pre-filter	**Ref. 56329**	**Ref. 62671**
HEPA filter	**Ref. 56329**	**Ref. 62671**
Carbon pad	**Ref. 58073**	**Ref. 62673**

Do you need an expert to **help you get started** with your new machine, **specific training**, or **preventive maintenance?**

Contact our support team →

Need an activated carbon refill?
Ask your local sales for the part number: **Ref. 49285**
(Activated carbon, 25 kg (55 lbs) refill bag)

Gravotech, leader in permanent marking solutions

85+
years of expertise ensuring reliable marking

25+
years of experience designing laser tables

30
products sold per hour, worldwide across industries

1
partner delivering end-to-end marking solutions

CONTACT US

web.us@gravotech.com
+1 800 843 7637
www.gravotech.us

GRAVOTECH, INC. (USA HEADQUARTERS)
2200 Northmont Parkway,
Duluth, GA 30096, USA

DISTRIBUTED BY

FOLLOW US

Gravotech
gravotech.off
Gravotech Group
Gravotech - Gravograph

Gravotech-LightSpeed-Accessories-10-2026-en-US. The information, photos and illustrations contained in this document are not binding and can be modified without notice. This document is non contractual. Gravograph™, Gravotech™, Technifor™, WeLase™, Gravostyle™ and Dedicace™ are used, pending or registered trademarks of a Gravotech Group company.
©Gravotech Marking - 466 rue des Mercières - Z.I. Périca - 69140 Rillieux-la-Pape - France. Société par Actions Simplifiée with a share capital of 26 749 016 € - SIREN : 334 818 515 RCS Lyon.